filtemc

Inverter Input Reactor

FT33DK Series

Introduction

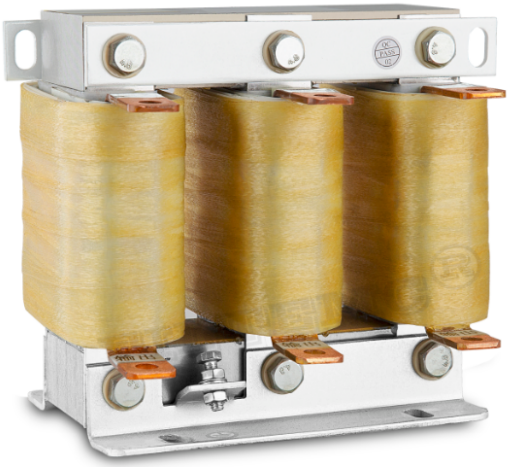

An inverter input reactor is specially recommended to be used in the following circumstance:

- Several inverters are closed connected in parallel.
- There is obvious disturbance(interference, over voltage) from other equipment.
- The voltage imbalance between different phases of the power supply is above 1.8% of the rated voltage.
- A great number of inverters installed in one circuit.
- Decrease the overload of power factor correction capacitor, if there is certain power factor correction device in the cabinet.
- Power capacity ≥ 600KVA, and the distance between inverter and the large capacity power supply is within 10m.
- The inverter is powered by circuit with extremely low impedance(the transformer capacity is higher than 10times of the rated value of inverter)

Features and Benefits

- Provide improved overload protection for power supply
- Reduce the current harmonic distortion of inverter
- Increase the power factor of input supply, reduce high order harmonics
- Restrain the surge to power equipment caused by transformer

Working Conditions

- Ambient temperature: -40℃ ~ +45℃ no decreasing of the rated value, highest temp. +55℃ ; if above 45℃ , the rated current decreases 2% with the temperature increases 1℃ .
- Working place not higher than 2000 meters above the sea level.
- Operation temperature: -25℃ ~+45℃ , relative humidity ≤ 90%.
- No harmful gas, no flammable or explosive articles.
- With good ventilation, if installed in cabinet, please add ventilating equipment.

Standards

- IEC289: 1987 Reactor
- GB10229-88 Reactor(eqv IEC289:1987)
- JB9644-1999: Reactor for Semiconductor Electric Drive

Technical Data

Rated Voltage: VR	Φ3/380VAC~1140VAC
Operating Frequency: FR	50/60Hz
Rated Current: IR	3~1600A
Max. Current	1.5×rated current, lasts for 60s
Protection Class	IP00~IP22
Insulation Class	class F, H
Insulation Resistance	≥ 100MΩ@1000VDC
Voltage Drop	<4%, torque loss may be caused if higher than 4%
Noise	≤ 65dB
Temperature Rise	≤ 85K
Dielectric Strength	3000VAC/50Hz/5mA/10S no breakdown of the core windings(factory test)

Outline Drawing and Dimensions(mm)

Part No.	Outline Drawing	Power(KW)	Current(A)	Insulation Class	Voltage Drop
FT33DK-10-A	Fig.1	3.7	10	F	2%
FT33DK-15-A	Fig.1	5.5	15	F	2%
FT33DK-20-A	Fig.2	7.5	20	F	2%
FT33DK-30-A	Fig.2	11	30	F	2%
FT33DK-40-A	Fig.3	15	40	F	2%
FT33DK-50-A	Fig.3	18.5	50	F	2%
FT33DK-60-A	Fig.3	22	60	F	2%
FT33DK-80-A	Fig.4	30	80	F	2%
FT33DK-90-A	Fig.4	37	90	F	2%
FT33DK-120-A	Fig.4	45	120	F	2%
FT33DK-150-A	Fig.4	55	150	F	2%
FT33DK-200-A	Fig.4	75	200	F	2%

Part No.	Outline Drawing	Power(KW)	Current(A)	Insulation Class	Voltage Drop
FT33DK-250-A	Fig.4	110	250	F	2%
FT33DK-300-A	Fig.4	132	300	F	2%
FT33DK-330-A	Fig4	160	330	F	2%
FT33DK-390-A	Fig.4	185	390	F	2%
FT33DK-490-A	Fig.4	220	490	F	2%
FT33DK-600-A	Fig.4	280	600	F	2%
FT33DK-660-A	Fig4	300	660	F	2%
FT33DK-800-A	Fig.4	380	800	F	2%
FT33DK-10-C	Fig.1	3.7	10	F	2%
FT33DK-15-C	Fig.1	5.5	15	F	2%
FT33DK-20-C	Fig.1	7.5	20	F	2%
FT33DK-30-C	Fig.2	11	30	F	2%
FT33DK-40-C	Fig.2	15	40	F	2%

Part No.	Outline Drawing	Power(KW)	Current(A)	Insulation Class	Voltage Drop
FT33DK-50-C	Fig.2	18.5	50	F	2%
FT33DK-60-C	Fig.2	22	60	F	2%
FT33DK-80-C	Fig.4	30	80	F	2%
FT33DK-90-C	Fig.4	37	90	F	2%
FT33DK-120-C	Fig.4	45	120	F	2%
FT33DK-150-C	Fig.4	55	150	F	2%
FT33DK-200-C	Fig.4	75	200	F	2%
FT33DK-250-C	Fig.4	110	250	F	2%
FT33DK-300-C	Fig.4	132	300	F	1%
FT33DK-330-C	Fig.4	160	330	F	1%
FT33DK-390-C	Fig.4	185	390	F	1%
FT33DK-490-C	Fig.4	220	490	F	1%
FT33DK-600-C	Fig4	280	600	F	1%

Part No.	Outline Drawing	Power(KW)	Current(A)	Insulation Class	Voltage Drop
FT33DK-660-C	Fig.4	300	660	F	1%
FT33DK-800-C	Fig.4	380	800	F	1%
FT33DK-1000-C	Fig.4	450	1000	F	1%
FT33DK-1200-C	Fig.4	550	1200	F	1%
FT33DK-1600-C	Fig.4	630	1600	F	1%

Outline Drawing and Dimensions (mm)

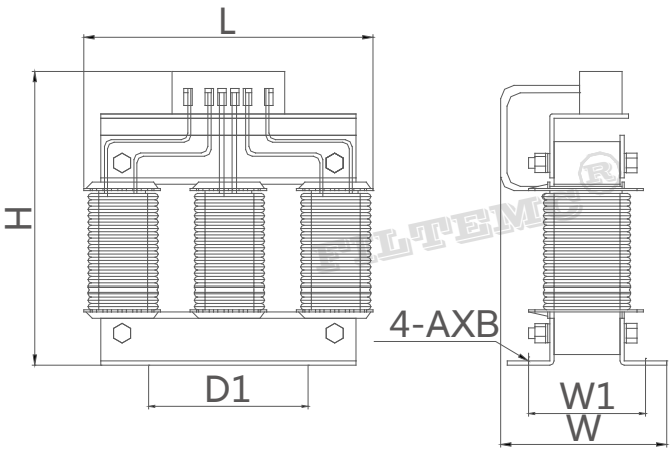

Fig.1

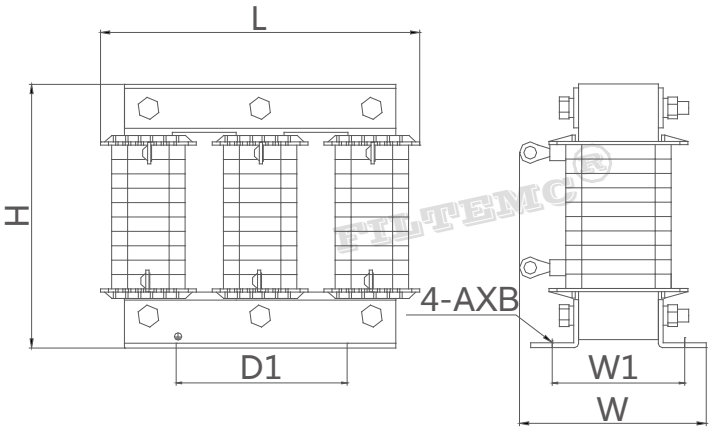

Fig.2

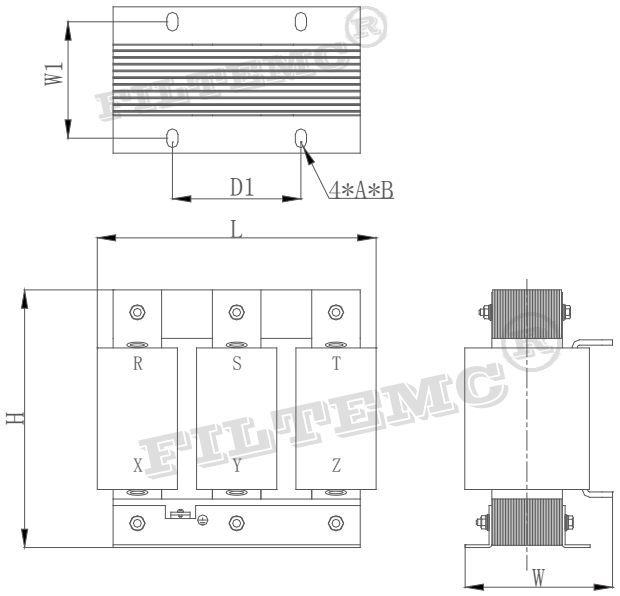

Fig.3

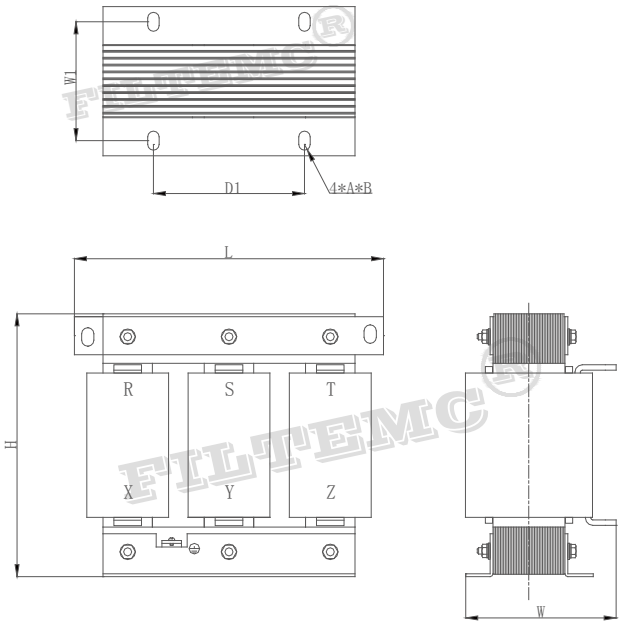

Fig.4

Part No.	Outline Drawing	Dimensions(mm)						
		L(max)	W(max)	H(max)	D1±2	D2±2	W1±2	A x B
FT33DK-10-A	Fig.1	145	80	140	75	/	57	6.5x11
FT33DK-15-A	Fig.1	145	80	140	75	/	57	6.5x11
FT33DK-20-A	Fig.2	170	120	140	80	/	65	6.5x11
FT33DK-30-A	Fig.2	170	120	140	80	/	65	6.5x11

Part No.	Outline Drawing	Dimensions(mm)						
		L(max)	W(max)	H(max)	D1±2	D2±2	W1±2	A x B
FT33DK-40-A	Fig.3	180	120	165	110	/	73	8x15
FT33DK-50-A	Fig.3	180	120	165	110	/	73	8x15
FT33DK-60-A	Fig.4	180	120	165	110	/	73	8x15
FT33DK-80-A	Fig.4	210	130	175	110	/	92	8x18
FT33DK-90-A	Fig.4	210	135	175	110	/	97	8x18
FT33DK-120-A	Fig.4	210	135	170	110	/	95	8x24
FT33DK-150-A	Fig.4	245	175	215	130	/	110	11x24
FT33DK-200-A	Fig.4	250	185	220	130	/	110	11x24
FT33DK-250-A	Fig.4	265	190	250	150	/	115	11x24
FT33DK-300-A	Fig.4	265	190	225	150	/	112	11x24
FT33DK-330-A	Fig.4	285	190	250	170	/	115	11x24
FT33DK-390-A	Fig.4	340	195	300	195	/	125	11x24
FT33DK-490-A	Fig.4	340	195	300	195	/	125	11x24

Part No.	Outline Drawing	Dimensions(mm)						
		L(max)	W(max)	H(max)	D1±2	D2±2	W1±2	A x B
FT33DK-600-A	Fig.4	340	250	300	195	/	135	11x24
FT33DK-660-A	Fig.4	340	250	300	195	/	145	11x24
FT33DK-800-A	Fig.4	385	265	360	230	/	150	11x24
FT33DK-10-C	Fig.1	145	80	140	75	/	57	6.5x11
FT33DK-15-C	Fig.1	145	80	140	75	/	57	6.5x11
FT33DK-20-C	Fig.1	145	80	140	75	/	57	6.5x11
FT33DK-30-C	Fig.2	170	120	140	80	/	65	6.5x11
FT33DK-40-C	Fig.2	170	120	140	80	/	65	8x15
FT33DK-50-C	Fig.2	170	120	140	80	/	65	8x15
FT33DK-60-C	Fig.2	170	120	140	80	/	65	8x15
FT33DK-80-C	Fig.4	210	135	175	110	/	97	8x18
FT33DK-90-C	Fig.4	210	140	175	110	/	97	8x18
FT33DK-120-C	Fig.4	210	135	170	110	/	95	8x24

Part No.	Outline Drawing	Dimensions(mm)						
		L(max)	W(max)	H(max)	D1±2	D2±2	W1±2	A x B
FT33DK-150-C	Fig.4	210	140	175	110	/	99	8x18
FT33DK-200-C	Fig.4	245	180	220	130	/	118	11x24
FT33DK-250-C	Fig.4	245	180	220	130	/	120	11x24
FT33DK-300-C	Fig4	245	185	220	130	/	120	11x24
FT33DK-330-C	Fig.4	280	200	240	130	/	115	11x24
FT33DK-390-C	Fig.4	280	200	240	130	/	115	12x20
FT33DK-490-C	Fig.4	280	200	240	130	/	115	11x24
FT33DK-600-C	Fig.4	280	200	280	130	/	115	11x24
FT33DK-660-C	Fig.4	320	230	285	170	/	140	12x20
FT33DK-800-C	Fig.4	320	240	295	170	/	140	12x20
FT33DK-1000-C	Fig.4	355	275	330	200	/	155	14x24
FT33DK-1200-C	Fig.4	355	285	340	200	/	155	14x24
FT33DK-1600-C	Fig.4	350	285	340	200	/	165	14x24

Important Notes on EMI Filter Application

1. Storage of EMI Filters:

EMI filters mustn't be left out in the heat of the sun or exposed to the rain, it should be stored in warehouse with good ventilation, surrounding temperature between -30℃ and +65 ℃, the highest relative air humidity lower than 90%, and no corrosive liquid or gas.

2. Installation of EMI Filters:

- EMI filters should be installed at power input, and the line inside the chassis be as short as possible to reduce radiated interference.
- Both input and output lines of EMI filters neither be intersected nor be tied up by string.
- Make sure the mounting flange fully grounded, and keep the ground cable as short as possible if filters are connected to other equipment.
- If the terminal is stud, please use two spanners to fasten the screw nut when connecting to avoid stud rotating and thus causing changes to the internal circuit and consequently leading to filters arcing, short circuit, broken down or the filtering effect worsened. First use spanner1 to fix the screw nut near the metal case, then use spanner2 to tighten the screw nut in front(shown as Figure1), otherwise the terminals may be damaged. Apply the same for the connection of other phases.
- Keep the tools fastening the stud be vertical to the metal case of filter when installing terminal block filters (shown as Figure2), must not tilt(shown as Figure3), otherwise the terminal blocks may be damaged.

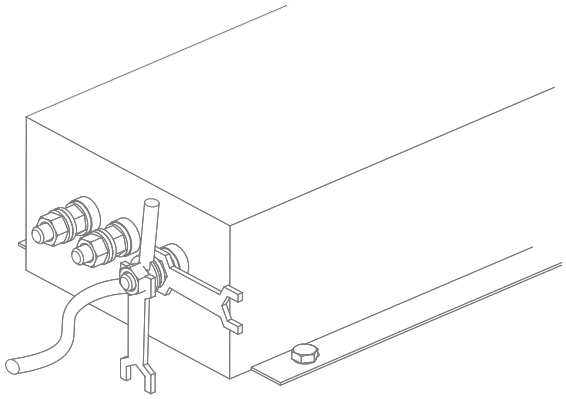

(Figure1)

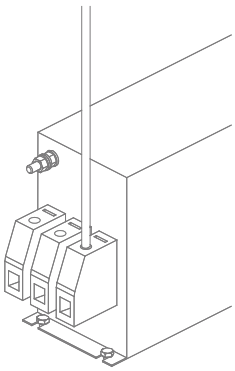

(Figure2)

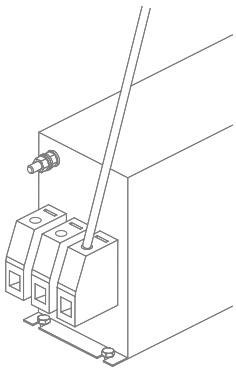

(Figure3)

3. Reminding and Warning:

Please read all the safety warnings and instructions before installing filters and putting them into use:

- Don't take terminals as supporting point when moving filters to avoid the terminals distortion, loosening or broken.
- The protective earth connections shall be the first to be made when the EMC filter is installed and the last to be disconnected.
- Filters generate leakage current, please make sure they are well grounded before putting into operation.
- If the rated current is higher than 50A, we recommend grounding by the earth terminals but not only through the metal case of filters.
- Danger of electric shock: EMC filters contain components that store an electric charge. Dangerous voltages can continue to exist at the filter terminals for longer than five minutes even after the power has been switched off.
- The working conditions of EMI filter should comply with the technical parameters stated on the label, over voltage or overload could cause damage to filters. It is suggested to take proper over current protection measures.
- Current drop occurs when the surrounding temperature rises, fail to follow the current drop requirement may lead to impermissible exceeding of the component temperature, as a result the service life of filters will be shortened after long time running.

Service and Support

Contact information of Tech. Dept.:

T: 0086-531-58622887

F: 0086-531-58622899

E: filtemc@filtemc.com

A: Building 20, Xinmao Qilu Science and Technology City, No. 1 Zidong Road, Tianqiao District, Jinan 250119, China

Contact information of Sales:

T: 0086-531-58622888

F: 0086-531-58622886

E: filter@filtemc.com

Skype: Lisawong2016@hotmail.com

Web.: www.filtemc.com