filtemc

Inverter Output Series Filters

FT330T Series

Introduction

- Rated current: 6A~2000A
- Stud or terminal block optional (≥ 250A it is copper bar)
- FT330T series are general purpose filters, suitable for most inverter brand
- Could be customized according to the real interference situation of customer's working field

Features and Benefits

- FT330T series is designed according to the frequency characteristics of interference generated by inverter output when it works towards load.
- Effectively solve the load heating, noise and other abnormal situation in the case of frequency inverters connecting with long motor cables, better effect can be achieved if a reactor is applied too.
- Effectively control the common mode interference along the cable to protect load and increase its service life
- Touch-safe terminal block versions are available to meet the high safety requirement of certain special applications.
- Copper bar terminals applied for versions above 250A to keep pace with international standard, easy and safe connection.
- 520VAC or 690VAC high voltage versions optional

Typical Applications

- Inverters and converters
- Servo driver
- Variable frequency power supply and other industrial applications with long moter cables

Electrical Schematics

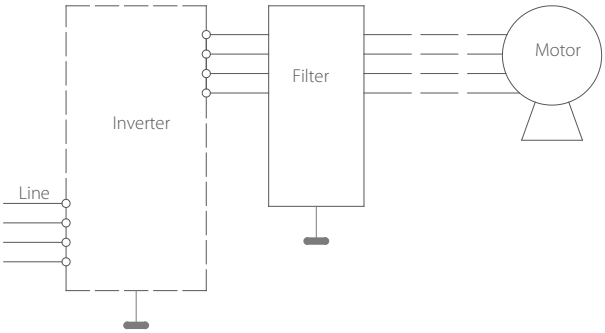

Technical Data

Rated Voltage: VR	250/440VAC
Operating Frequency: FR	50/60Hz
Rated Current: IR	6~2000A@40℃
Test Voltage: Vtest	2250VDC, 3S(line-line); 2700VDC, 3S(line-ground)
Climatic Category (IEC 60068-1)	25/085/21(-25℃/+85℃ Damp heat test for 21 days)

Tabulates

Part No.	Rated Current [A]	Inverter Capacity [KVA]	Terminals			Weight [g]
			-S	-T	-C	
FT330T-6	6	1.5	M4	○	---	950/350
FT330T-10	10	3.0	M4	○	---	980/570
FT330T-15	15	5.5	M4	○	---	1150/1100

Part No.	Rated Current [A]	Inverter Capacity [KVA]	Terminals			Weight [g]
			-S	-T	-C	
FT330T-20	20	7.5	M4	○	---	1100/780
FT330T-25	25	11.0	M6	○	---	1600/850
FT330T-30	30	15.0	M6	○	---	1650/870
FT330T-40	40	18.5	M6	○	---	1850/1300
FT330T-50	50	22.0	M6	○	---	3100/3400
FT330T-65	65	30.0	M6	○	---	2830/3720
FT330T-80	80	37.0	M8	○	---	3200/3800
FT330T-100	100	45.0	M8	○	---	3500/3400
FT330T-120	120	55.0	M8	○	---	6500/8500
FT330T-150	150	75.0	M10	○	---	7000/9000
FT330T-200	200	95.0	M10	○	---	7000/8500
FT330T-300	300	110/132	---	---	○	11400
FT330T-400	400	160	---	---	○	12100

Part No.	Rated Current [A]	Inverter Capacity [KVA]	Terminals -S	Terminals -T	Terminals -C	Weight [g]
FT330T-500	500	200	---	---	○	19300
FT330T-630	630	315	---	---	○	19700
FT330T-800	800	375	---	---	○	22000
FT330T-1000	1000	450	---	---	○	22000

Outline Drawing and Dimensions(mm)

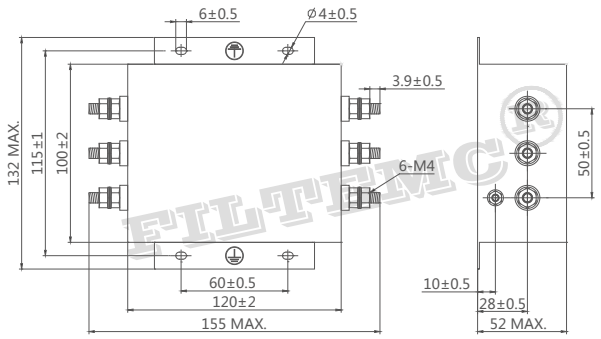

FT330T-6/10

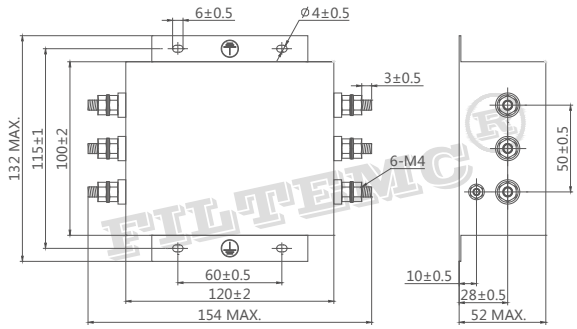

FT330T-15

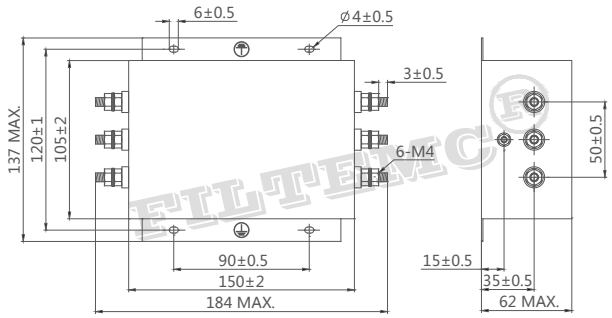

FT330T-20

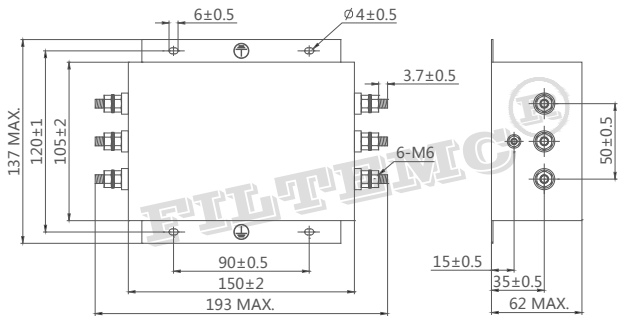

FT330T-25/30

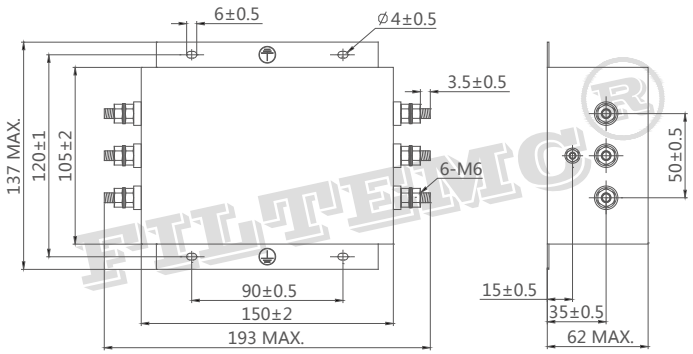

FT330T-40

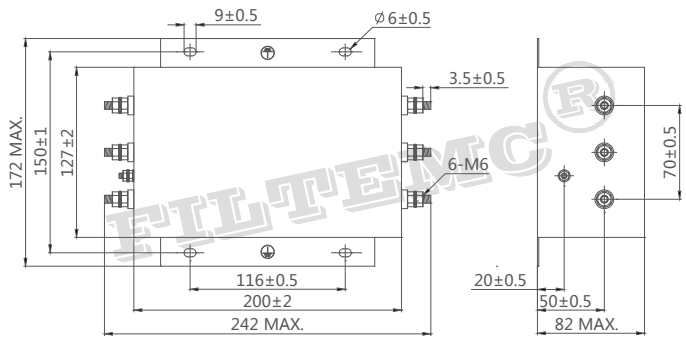

FT330T-50/65

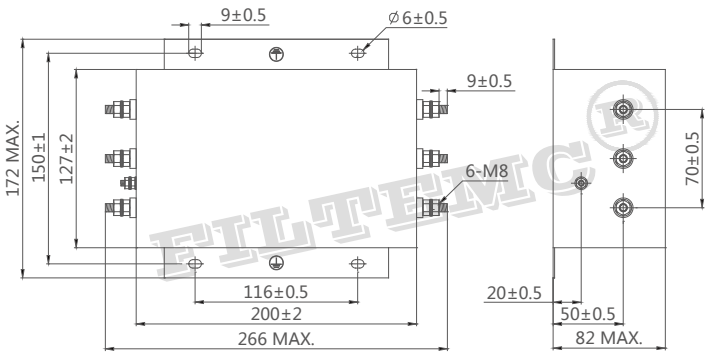

FT330T-80/100

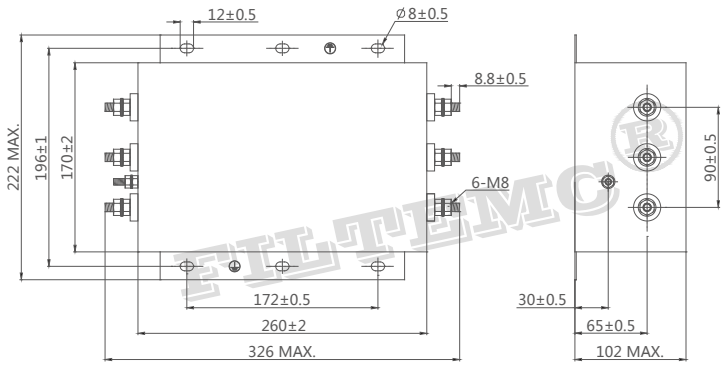

FT330T-120

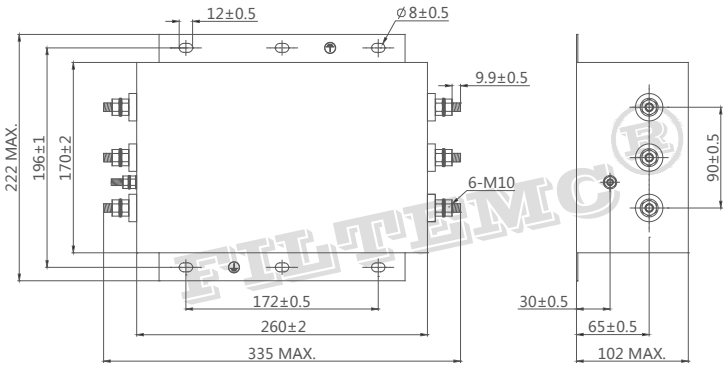

FT330T-150

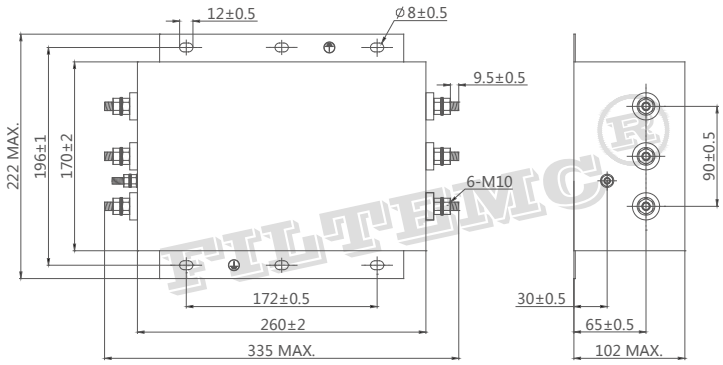

FT330T-200

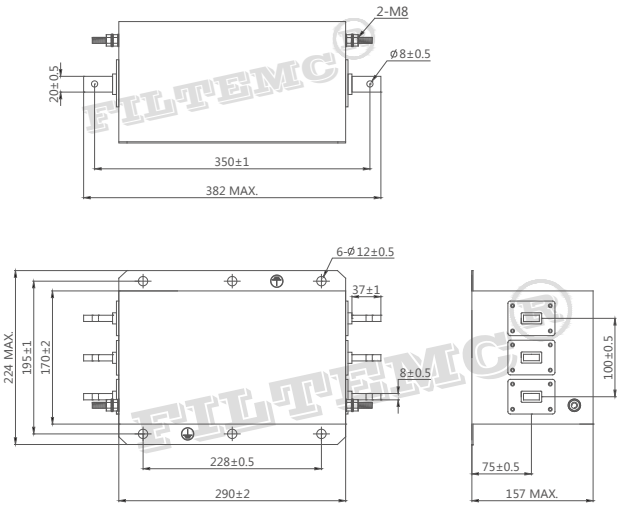

FT330T-300/400

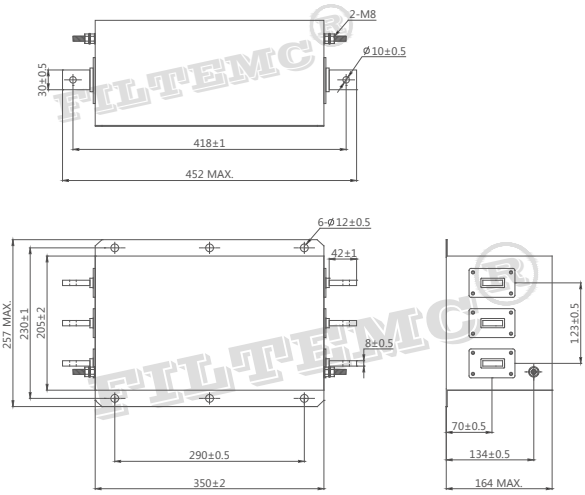

FT330T-500/630

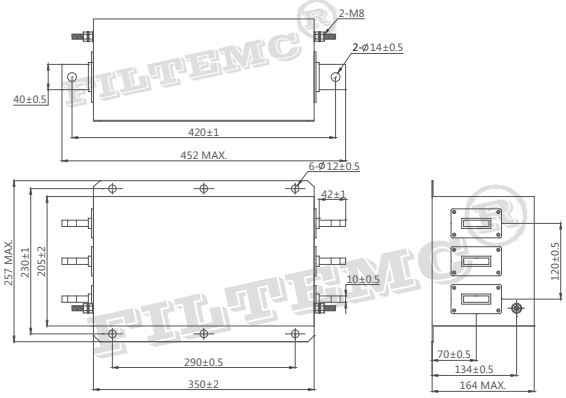

FT330T-800/1000

Outline Drawing and Dimensions of Terminal Block Series(mm)

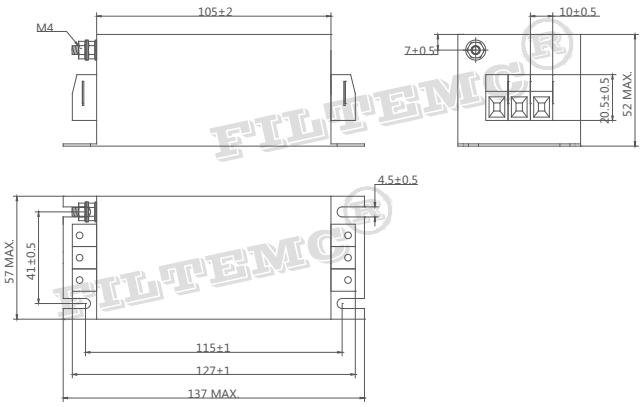

FT330T-6/10-T3

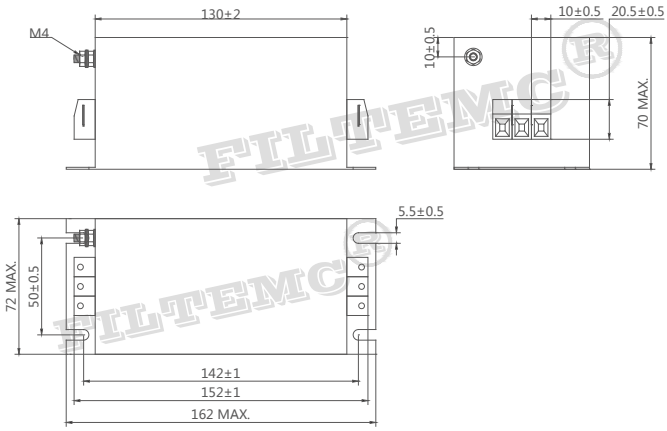

FT330T-15/20/25/30-T3

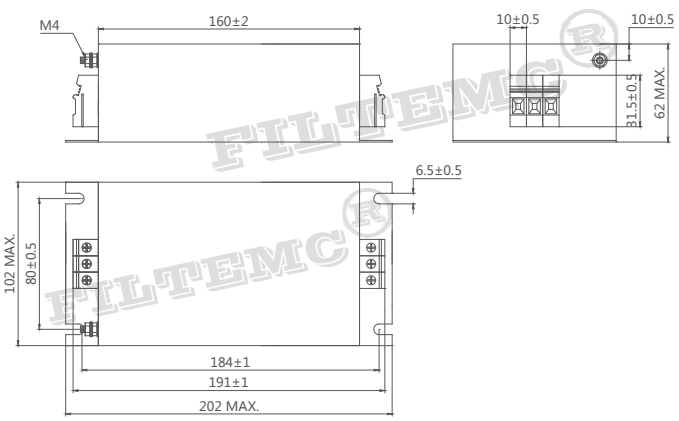

FT330T-40-T3

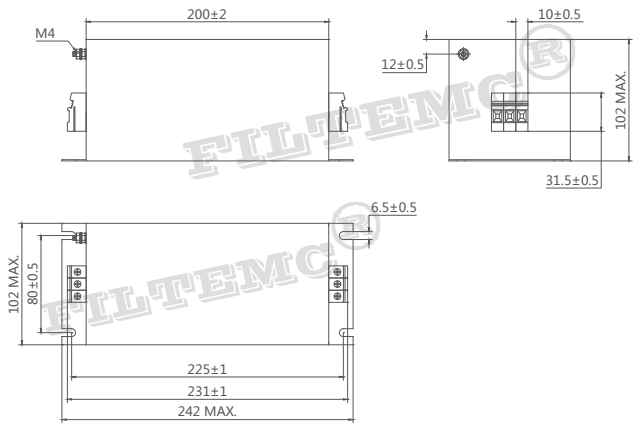

FT330T-50-T3

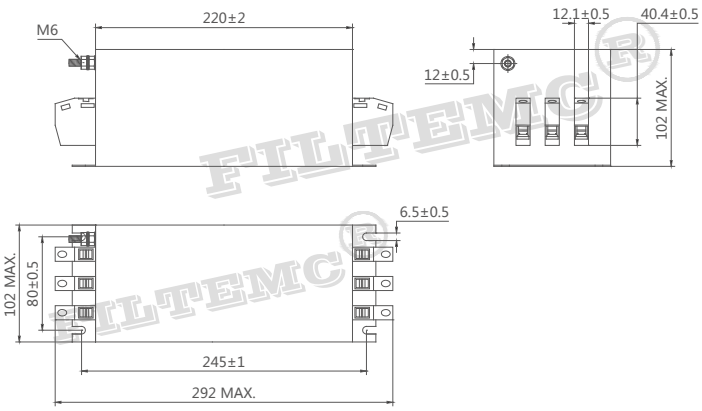

FT330T-65/80-T3

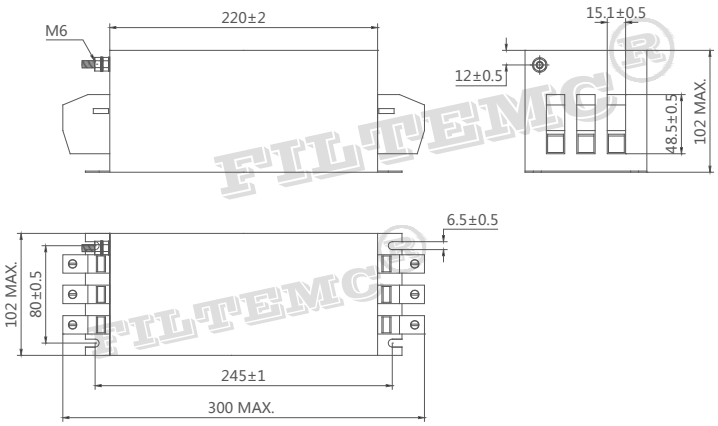

FT330T-100-T3

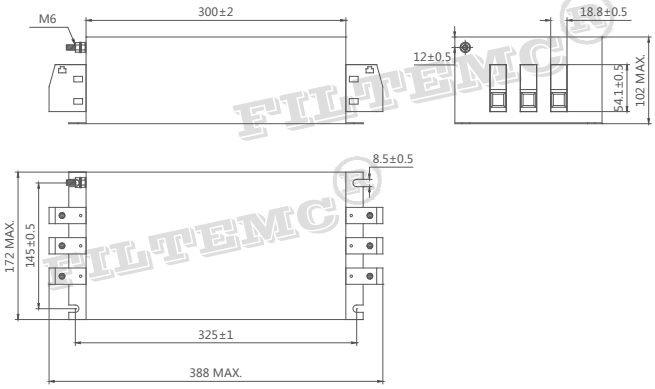

FT330T-120/150-T3

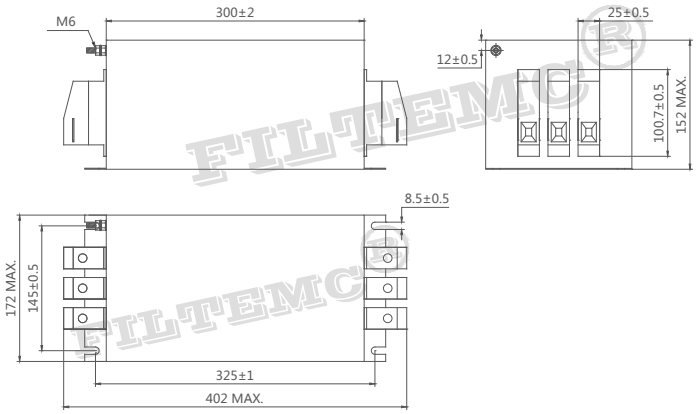

FT330T-200-T3

Important Notes on EMI Filter Application

1. Storage of EMI Filters:

EMI filters mustn't be left out in the heat of the sun or exposed to the rain, it should be stored in warehouse with good ventilation, surrounding temperature between -30℃ and +65℃, the highest relative air humidity lower than 90%, and no corrosive liquid or gas.

2. Installation of EMI Filters:

- EMI filters should be installed at power input, and the line inside the chassis be as short as possible to reduce radiated interference.
- Both input and output lines of EMI filters neither be intersected nor be tied up by string.
- Make sure the mounting flange fully grounded, and keep the ground cable as short as possible if filters are connected to other equipment.
- If the terminal is stud, please use two spanners to fasten the screw nut when connecting to avoid stud rotating and thus causing changes to the internal circuit and consequently leading to filters arcing, short circuit, broken down or the filtering effect worsened. First use spanner1 to fix the screw nut near the metal case, then use spanner2 to tighten the screw nut in front(shown as Figure1), otherwise the terminals may be damaged. Apply the same for the connection of other phases.
- Keep the tools fastening the stud be vertical to the metal case of filter when installing terminal block filters (shown as Figure2), must not tilt(shown as Figure3), otherwise the terminal blocks may be damaged.

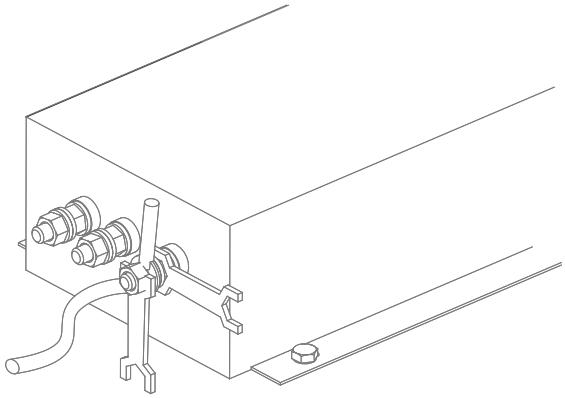

(Figure1)

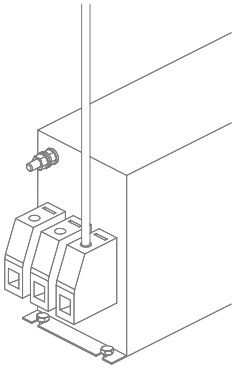

(Figure2)

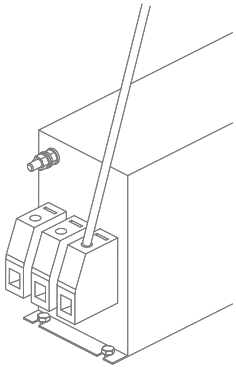

(Figure3)

3. Reminding and Warning :

Please read all the safety warnings and instructions before installing filters and putting them into use:

- Don't take terminals as supporting point when moving filters to avoid the terminals distortion, loosening or broken.
- The protective earth connections shall be the first to be made when the EMC filter is installed and the last to be disconnected.
- Filters generate leakage current, please make sure they are well grounded before putting into operation.
- If the rated current is higher than 50A, we recommend grounding by the earth terminals but not only through the metal case of filters.
- Danger of electric shock: EMC filters contain components that store an electric charge. Dangerous voltages can continue to exist at the filter terminals for longer than five minutes even after the power has been switched off.
- The working conditions of EMI filter should comply with the technical parameters stated on the label, over voltage or overload could cause damage to filters. It is suggested to take proper over current protection measures.
- Current drop occurs when the surrounding temperature rises, fail to follow the current drop requirement may lead to impermissible exceeding of the component temperature, as a result the service life of filters will be shortened after long time running.

Service and Support

Contact information of Tech. Dept.:

T: 0086-531-58622887

F: 0086-531-58622899

E: filtemc@filtemc.com

A: Building 20, Xinmao Qilu Science and Technology City, No. 1 Zidong Road, Tianqiao District, Jinan 250119, China

Contact information of Sales:

T: 0086-531-58622888

F: 0086-531-58622886

E: filter@filtemc.com

Skype: Lisawong2016@hotmail.com

Web.: www.filtemc.com