filtemc

IEC Inlet Filter with One Fuse

FT110I-A Series

Introduction

- Rated current: 1A~16A
- Standard IEC inlet with one fuse at the input end
- Wire or solder lug terminals at the output end
- Optional medical versions（H type）
- Custom specific versions available on request

Features and Benefits

- Specially designed for standard IEC connector, fast and simple installation, highly cost effective.
- With one Φ5x20mm F type glass fuse.
- FT110I-A series are general purpose one-stage common mode filters.
- Excellent attenuation performance for interference from 150KHz to 30MHz.

Typical Applications

- Household small tools
- Instruments and meters
- IT, telecommunication equipment
- Electronic equipment requiring connection of standard plug
- Test and measurement equipment

Electrical Schematics

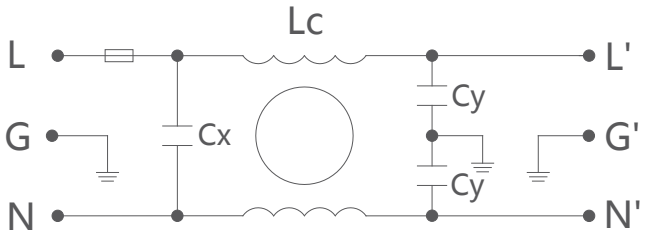

FT110I-A

Technical Data

Rated Voltage: VR	110/250VAC
Operating Frequency: FR	50/60Hz
Rated Current: IR	1~10A@40℃
Test Voltage: Vtest	1500VDC, 3S(line-line); 1500VAC, 3S(line-ground)
Climatic Category (IEC 60068-1)	25/085/21(-25℃/+85℃ Damp heat test for 21 days)

Tabulates

Part No.	Rated Current [A]	Leakage Current [mA] 250VAC/50Hz @20℃	Terminals 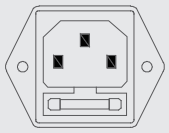	Weight [g]
FT110I-1-A	1	< 0.6	○	50
FT110I-3-A	3	< 0.6	○	50
FT110I-6-A	6	< 0.6	○	52
FT110I-10-A	10	< 0.6	○	55

Insertion Loss (dB)

Common Mode

Differential Mode

Note: Insertion loss is tested with a system of empty load and 50 Ω-50Ω according to UL1283 Standard. The actual effect please follow the field data of real application.

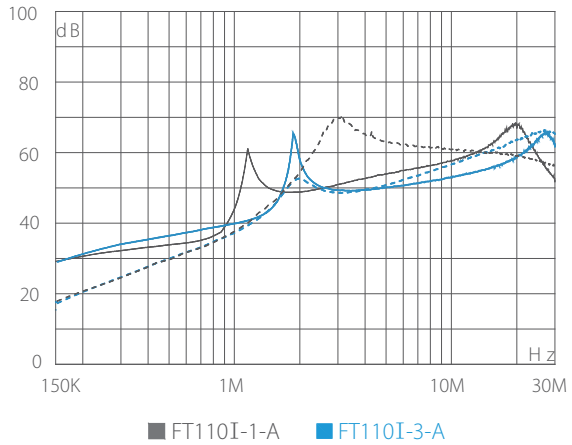

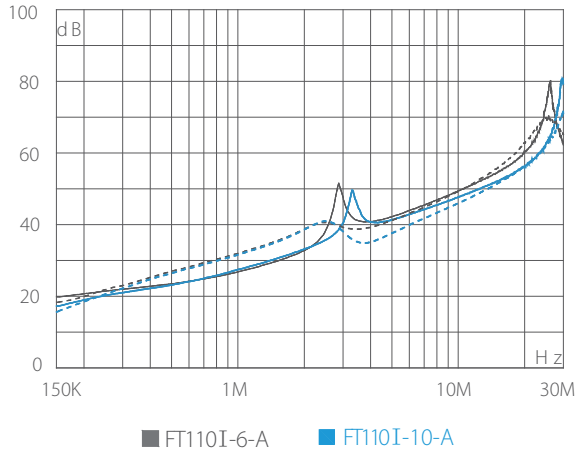

Outline Drawing and Dimensions(mm)

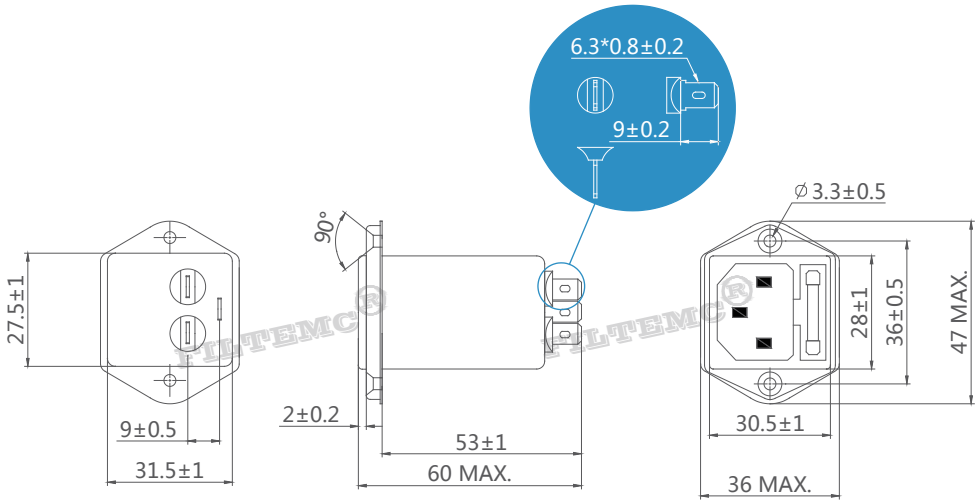

FT110I-1/3/6/10-A

Important Notes on EMI Filter Application

1. Storage of EMI Filters:

EMI filters mustn't be left out in the heat of the sun or exposed to the rain, it should be stored in warehouse with good ventilation, surrounding temperature between -30℃ and +65℃, the highest relative air humidity lower than 90%, and no corrosive liquid or gas.

2. Installation of EMI Filters:

- EMI filters should be installed at power input, and the line inside the chassis be as short as possible to reduce radiated interference.
- Both input and output lines of EMI filters neither be intersected nor be tied up by string.
- Make sure the mounting flange fully grounded, and keep the ground cable as short as possible if filters are connected to other equipment.
- If the terminal is stud, please use two spanners to fasten the screw nut when connecting to avoid stud rotating and thus causing changes to the internal circuit and consequently leading to filters arcing, short circuit, broken down or the filtering effect worsened. First use spanner1 to fix the screw nut near the metal case, then use spanner2 to tighten the screw nut in front(shown as Figure1), otherwise the terminals may be damaged. Apply the same for the connection of other phases.
- Keep the tools fastening the stud be vertical to the metal case of filter when installing terminal block filters (shown as Figure2), must not tilt(shown as Figure3), otherwise the terminal blocks may be damaged.

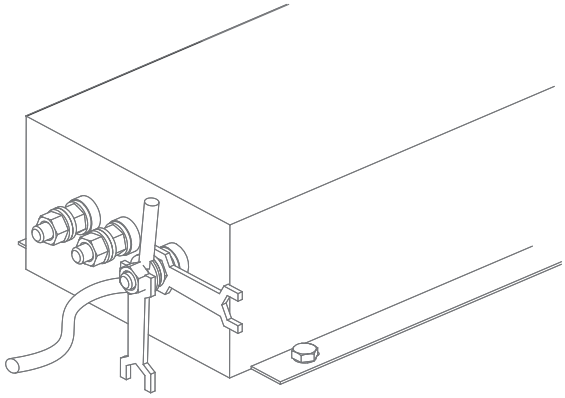

(Figure1)

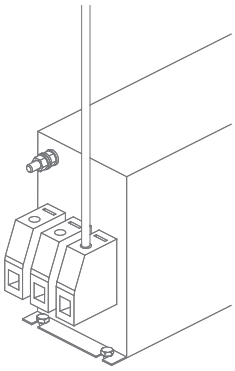

(Figure2)

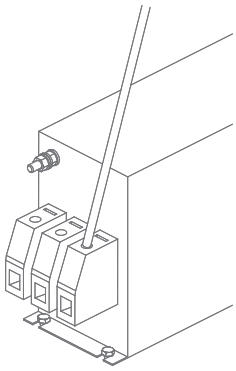

(Figure3)

3. Reminding and Warning :

Please read all the safety warnings and instructions before installing filters and putting them into use:

- Don't take terminals as supporting point when moving filters to avoid the terminals distortion, loosening or broken.
- The protective earth connections shall be the first to be made when the EMC filter is installed and the last to be disconnected.
- Filters generate leakage current, please make sure they are well grounded before putting into operation.
- If the rated current is higher than 50A, we recommend grounding by the earth terminals but not only through the metal case of filters.
- Danger of electric shock: EMC filters contain components that store an electric charge. Dangerous voltages can continue to exist at the filter terminals for longer than five minutes even after the power has been switched off.
- The working conditions of EMI filter should comply with the technical parameters stated on the label, over voltage or overload could cause damage to filters. It is suggested to take proper over current protection measures.
- Current drop occurs when the surrounding temperature rises, fail to follow the current drop requirement may lead to impermissible exceeding of the component temperature, as a result the service life of filters will be shortened after long time running.

Service and Support

Contact information of Tech. Dept.:

T: 0086-531-58622887

F: 0086-531-58622899

E: filtemc@filtemc.com

A: Building 20, Xinmao Qilu Science and Technology City, No. 1 Zidong Road, Tianqiao District, Jinan 250119, China

Contact information of Sales:

T: 0086-531-58622888

F: 0086-531-58622886

E: filter@filtemc.com

Skype: Lisawong2016@hotmail.com

Web.: www.filtemc.com